CONVOTHERM

Multifunction cooking device

Convotherm flexx pro 101 P

Project _____

Articel _____

Quantity _____

FCSI Section _____

Authorisation _____

Date _____

Standard Equipment:

- Automatic water filling system
- Liquid level gauge
- Multipoint core probe
- Integrated drain in bottom with electronic closing/opening system, 2 speeds of tilting
- Automatic basket lifting with safety sensor for lifting arm - possibility of cooking in baskets with closed cover
- Electronic cover with safety control
- Integrated retractable shower
- Integrated socket 230 V /16 A
- USB port – backup and data transfer
- HACCP data, Internet connection
- Optional version for plinth instalation

Technology:

Boiling
Gentle boiling
Deep frying
Frying
Braising
Low temperature cooking
Grilling
Confit
Sous – vide
Overnight cooking
Temperature range : 30°C–250°C
Pressure cooking temperature 101°C – 110°

Functions:

Automatic and manual cooking process
12” colour touch screen with intuitive control
Language mutation
Possibility to create and save own programs
Actual values visible on screen
Precise sensor temperature control
Memory of 800 programs with 12 steps
Clear visualization of the cooking process on the display
Display of error messages on the display
Technical and service information
Display lock adjustable On / Off

Construction:

Unit base frame - material CNS (DIN 1.4301), minimum thickness 2 mm
Frame housing material CNS (DIN 1.4301)
Pan - material CNS (DIN 1.4401), welded on both sides
Special bottom of the pan
JPX 17 heating system with full-surface heat distribution using stainless steel heating elements
Preheating time of the pan base to the operating temperature of 180 °C within 3 minutes
Double-walled, robust lid
Steam removal through the chimney in the centre of the lid
Central power, water and waste water connections
Gapless block construction of several appliances next to each other possible

Certificates: CE, TUV-SUD

ENG 05/2024 | Continuous improvements to the product may mean changes to the specification are made without explicit mention

Distributor:
Welbilt Deutschland GmbH
Talstraße 35, 82436 Eglfing, Germany
Tel: +49(0)8847 67-0
Fax: +49(0)8847 414
www.convotherm.com

Manufactured by:
JIPA International s. r. o. Belnická 603,
252 42 Jesenice u Prahy I Czech Republic
www.jipainternational.cz

Multifunction cooking device

Convotherm flexx pro 101 P

Technical Data:

Volume:	100 Liter – DIN 18857
GN capacity:	2 x GN 1/1
Bottom pan dimension:	713 x 580 mm
Depth:	280 mm
Cooking surface:	43 dm2
Dimensions (WxDxH):	1293 x 950 x 1050 mm
Weight:	524 kg
Pressure:	0,48 bar

Electric Connection:

3N~ 400V 50Hz
Power connected load: 24,6 kW
Fuse: 32 A

Water Connection:

Water inlet:	R3/4
Water outlet:	DN - 50

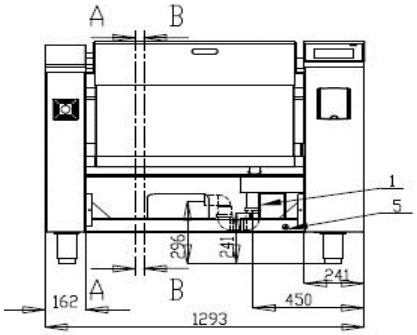

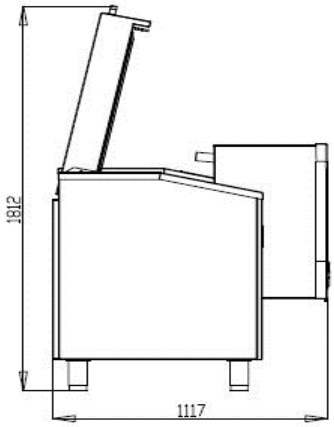

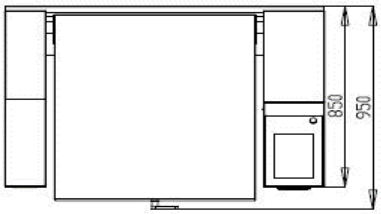

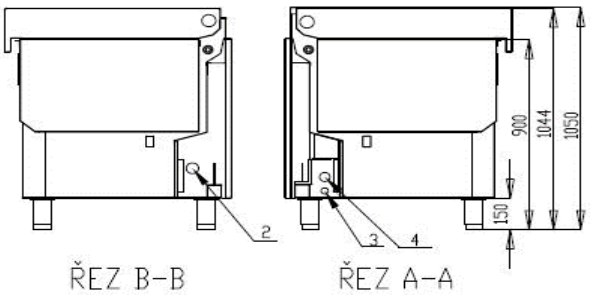

① Drain DN 50
② Water connection
③ Electric connection
④ Ethernet socket RJ 45
⑤ Ground

ENG 05/2024 | Continuous improvements to the product may mean changes to the specification are made without explicit mention

Distributor:
Welbilt Deutschland GmbH
Talstraße 35, 82436 Eglfing, Germany
Tel: +49(0)8847 67-0
Fax: +49(0)8847 414
www.convotherm.com

Manufactured by:
JIPA International s. r. o. Belnická 603,
252 42 Jesenice u Prahy I Czech Republic
www.jipainternational.cz

Multifunction cooking device

Convotherm flexx pro 101 P

Recommended accessories:

Accessories

	Part no.	101 DS	101 DM	101 DL	101	101 P	151	151 P	201
Battery powered lifting trolley	AC-00001	✔	✔	✔	✔	✔	✔	✔	✔
Oil filtration trolley	AC-00002	✔	✔	✔	✔	✔	✔	✔	✔
Handling trolley for baskets	AC-00003	✔	✔	✔	✔	✔	✔	✔	✔
Basket Extension Arm	AC-01-001	✔	-	-	-	-	-	-	-
Basket Extension Arm	AC-01-009	-	✔	-	-	-	-	-	-
Basket Extension Arm	AC-01-003	-	-	-	✔	✔	-	-	-
Basket Extension Arm	AC-01-010	-	-	✔	-	-	-	-	-
Basket Extension Arm	AC-01_005	-	-	-	-	-	✔	✔	-
Basket Extension Arm	AC-01-007	-	-	-	-	-	-	-	✔
Stainless steel stand with pull-out shelves	AC-05-002	✔	-	-	-	-	-	-	-
Stainless steel stand with pull-out shelves (on castors)	AC-05-003	✔	-	-	-	-	-	-	-
Sieve DS	AC-04-001	✔	-	-	-	-	-	-	-
Sieve DL	AC-04-011	-	-	✔	-	-	-	-	-
Sieve DM	AC-04-008	-	✔	-	-	-	-	-	-
Sieve	AC-04-003	-	-	-	✔	✔	✔	✔	✔
Spatula small	AC-03-001	✔	✔	-	-	-	-	-	-
Spatula big	AC-03-002	-	-	✔	✔	✔	✔	✔	✔
Spatula for omelette	AC-03-004	✔	✔	✔	✔	✔	✔	✔	✔
Cooking basket F	AC-02-005	-	✔	-	-	-	-	-	-
Cooking basket	AC-02-003	-	-	✔	✔	✔	✔	✔	✔
Cooking basket DS	AC-02-001	✔	-	-	-	-	-	-	-
Frying basket DS	AC-02-002	✔	-	-	-	-	-	-	-
Frying basket DL	AC-02-012	-	-	✔	-	-	-	-	-
Frying basket DM	AC-02-013	-	✔	-	-	-	-	-	-
Frying basket	AC-02-004	-	-	-	✔	✔	✔	✔	✔
Grate for NT / DM	AC-02-011	-	✔	-	-	-	-	-	-
Grate for NT / DL	AC-02-010	-	-	✔	-	-	-	-	-
Grate for NT	AC-02-009	✔	-	-	✔	✔	✔	✔	✔
Cleaning sponge	AC-99-001	✔	✔	✔	✔	✔	✔	✔	✔

Recommended set of accessories: 1x 2x 3x 4x 6x 8x

Note: Subject to errors and changes. All prices in Euro. The general terms and conditions of Welbilt Deutschland GmbH shall apply.
GN = Gastro-norm 325 mm x 530 mm. All previous price lists are replaced by this current version.

Distributor:
Welbilt Deutschland GmbH
Talstraße 35, 82436 Eglfing, Germany
Tel: +49(0)8847 67-0
Fax: +49(0)8847 414
www.convotherm.com

Manufactured by:
JIPA International s. r. o. Belnická 603,
252 42 Jesenice u Prahy I Czech Republic
www.jipainternational.cz